7180A.400-GA.U017

drawn left (right mirrorimage)

dimensions without coating / maximum coating allowed 0.1mm

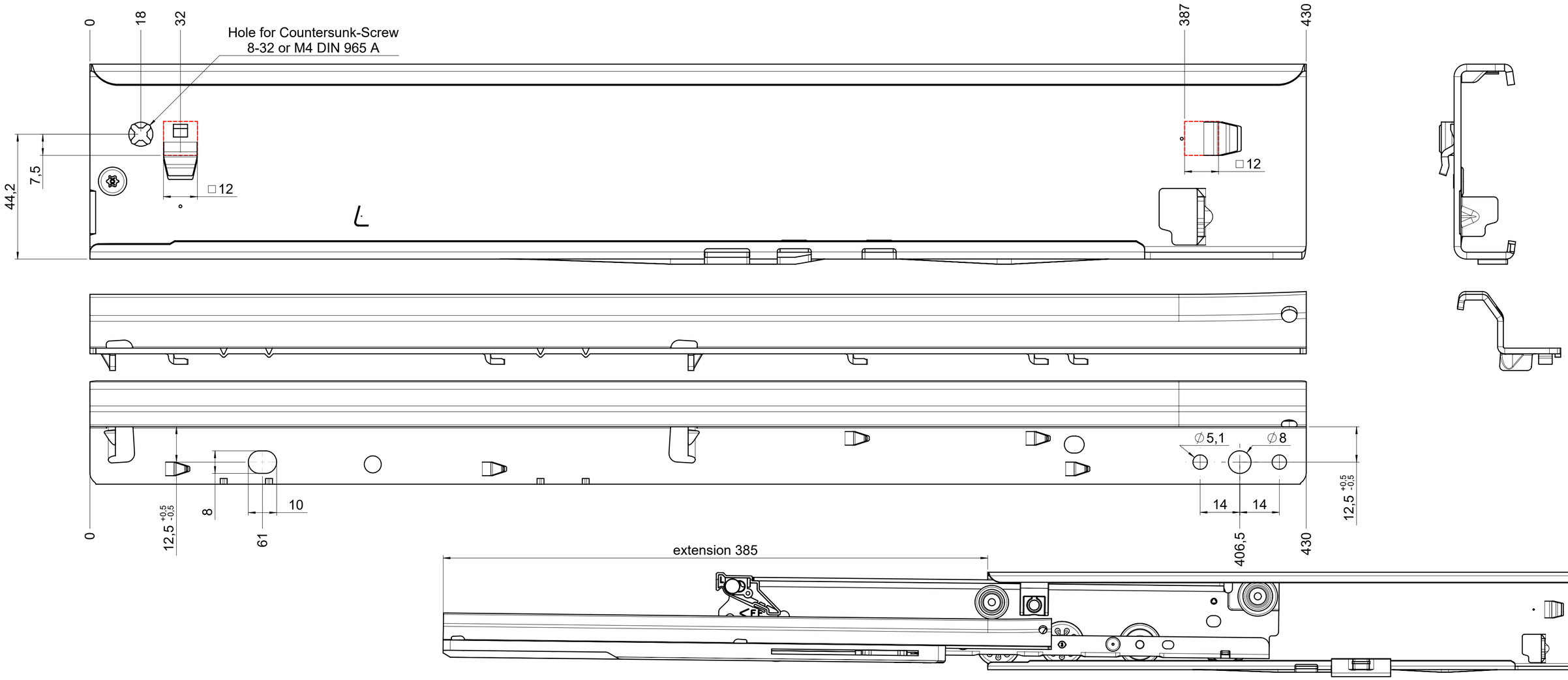

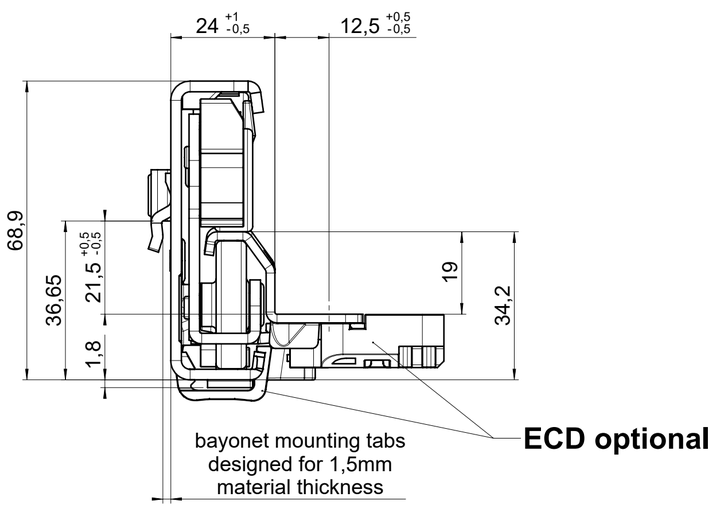

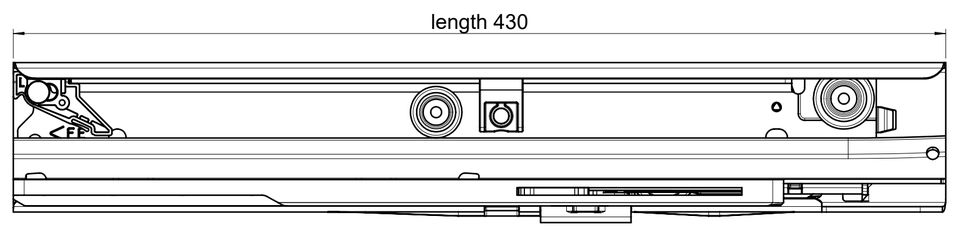

final approval

customer name:

signed by:

date:

all dimensions in mm

DIN ISO 128-30
missing dimensions see 3D
= theor. intersection

This drawing remains our property and may not be multiplied neither be disclosed to third parties (§§1,3 and 5 from the copyright Act (UrhG))

covered according to DIN ISO 16016

ind.	changes	date	na.
k			
j			
i			
h			
g			
f			
e			
d			
c			
b			
a			

scale: 1:1

surface:

	date	name
drawn	27-03-2023	BM
proven	00-00-0000	00

Fulterer

Fulterer AG & Co KG
A-6890 Lustenau / Austria
Fulterer AG
CH-9430 St. Margrethen

material, semi finished parts: A2
steel
(technical requirements Fulterer)

description:
FR 7180A / 40 EN (mm)
progressive-action full-extension
drawerslide / bottom mount

drawing number:
7180A.400-GA.U017

replaces version date:

Mittwoch, 26. April 2023 07:55:33 matthias.bechter